PROFILE OF PUMP DISPOSAL SYSTEM
(NOT TO SCALE)

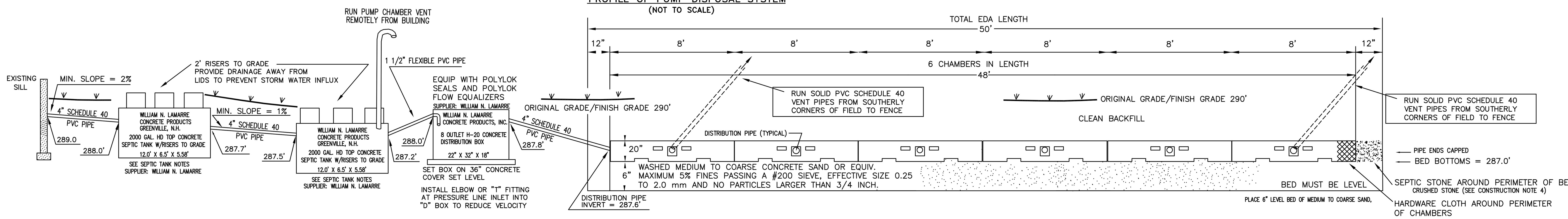

EDA CROSS SECTION
(NOT TO SCALE)

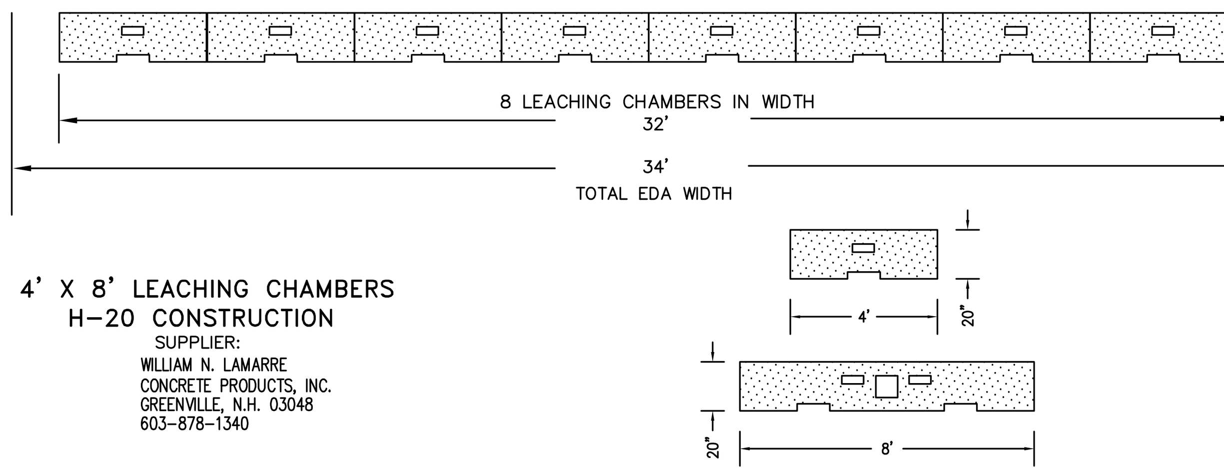

4' X 8' LEACHING CHAMBERS H-20 CONSTRUCTION
SUPPLIER:
WILLIAM N. LAMARRE
CONCRETE PRODUCTS, INC.
GREENVILLE, N.H. 03048
603-878-1340

BARNES BP314-SERIES PERFORMANCE CURVE

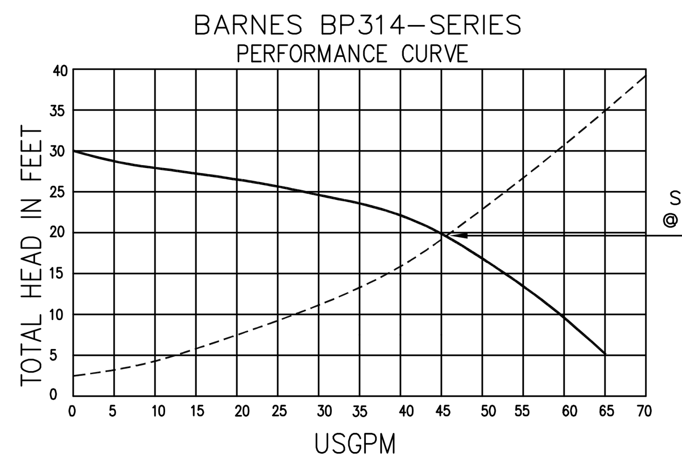

PUMP NOTES

1. INSTALL BARNES SERIES BP314
1/3 HP 1,750 RPM 60HZ
AAA PUMP SERVICE, INC. FAY ELECTRIC MOTORS
603-645-8610
2. EQUIP PUMP WITH DOUBLE FLOAT PUMP SWITCH AND "TANK ALERT" ALARM SYSTEM – MOUNT ALARM IN BUILDING
3. SWITCH SETTING CALCULATIONS (MAX. DOSE VOLUME = 200 GALS.):
SET FOR 6 DOSES PER DAY

1200 GPD LOADING / 6 DOSES PER DAY = 200 GAL. PER DOSE / 46 GAL. PER MINUTE = 4.34 MINUTE/DOSE

4. SYSTEM PERFORMANCE:
1 1/2" DIAM. MAIN FRICTION LOSS
REAL LENGTH 150'
EQUIVALENT LENGTH WITH FITTINGS 183.4'
TOTAL DYNAMIC HEAD = 19' GALLONS PER MINUTE = 46.

PUMP CHAMBER DETAIL

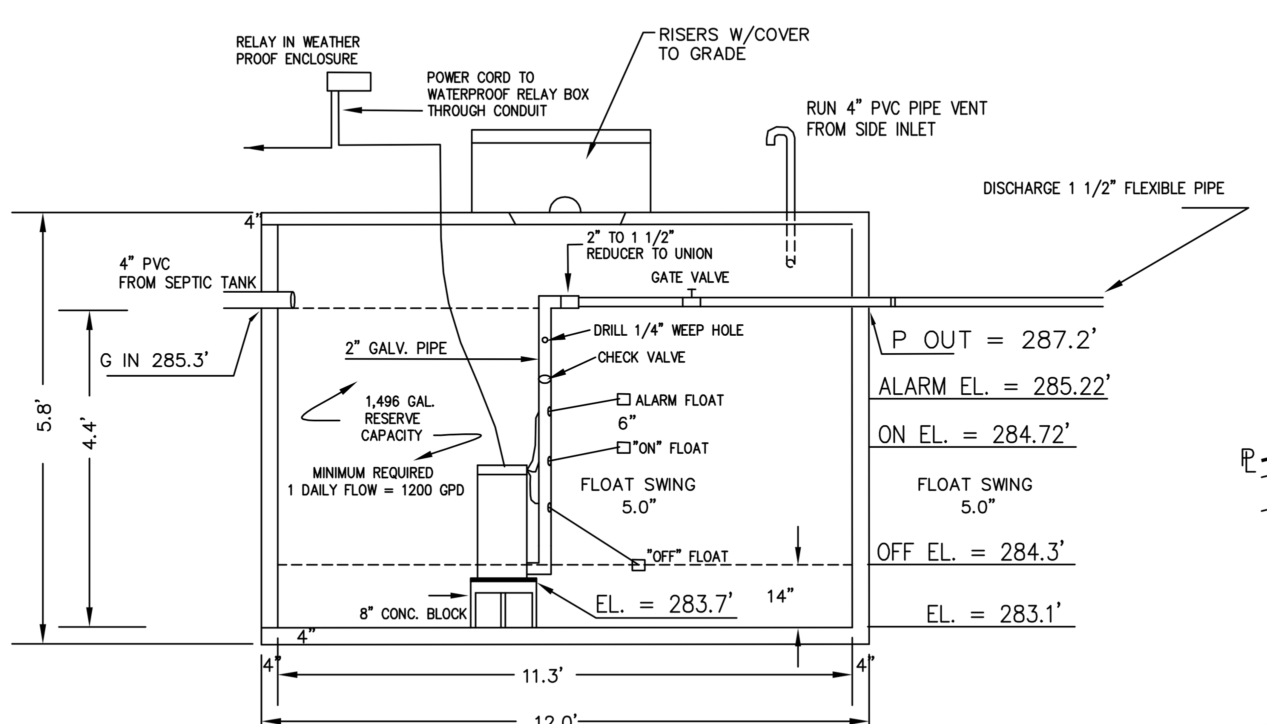

2,000 GAL. PUMP CHAMBER
SUPPLIER:
WM. N. LAMARRE
CONCRETE PRODUCTS INC.
(OR EQUIVALENT)

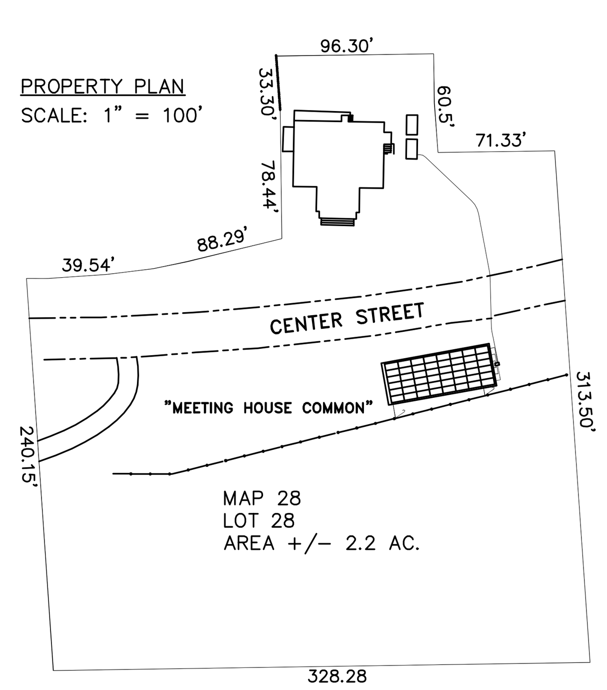

GENERAL NOTES

1. SYSTEM MAY HAVE TO BE REBUILT IN PLACE IF FAILURE OCCURS.
2. ALL SYSTEMS MUST COMPLY TO STATUTORY REQUIREMENTS OF RSA 485-A. THE INSTALLER IS RESPONSIBLE FOR VERIFYING SITE CONDITIONS. ANY DISCREPANCIES IN THE APPROVED PLAN AND THE ACTUAL SITE CONDITIONS MUST BE REPORTED BY THE INSTALLER TO THE DESIGNER PRIOR TO CONSTRUCTION. OMISSIONS IN THE PLANS DO NOT RELIEVE INSTALLER OF RESPONSIBILITIES.
3. FOR MAINTENANCE PROCEDURES SEE N.H. WATER SUPPLY AND POLLUTION CONTROL DIVISION'S PAMPHLET "YOU AND YOUR SEPTIC SYSTEM".

LEGEND

TP PT	TEST PIT LOCATION	TBM	TEMPORARY BENCHMARK
	STEELE RAIL FENCE		PROPERTY LINE
290	2' CONTOUR LINE	GBF	GRANITE BOUND
290	PROPOSED CONTOUR		HYDRANT
OHU	OVERHEAD UTILITY LINE		UTILITY POLE

CONSTRUCTION NOTES:

1. INSTALLATION GUIDELINES IN PER NHDES CODE OF ADMINISTRATIVE RULES ENV-WQ 1000.
2. EXCAVATE EDA AND SCARIFY SOIL TO 1.0' BELOW BED BOTTOM.
3. BOTTOM OF LEACH FIELD TO BE LEVEL AND CHAMBER ELEVATIONS SHALL BE IN ACCORDANCE WITH THE DESIGN SCHEMATICS.
4. **PIPES FROM DISTRIBUTION BOX OUTLETS TO CHAMBERS SHALL BE SOLID SCHD. 40 PVC PIPE.**
5. BOULDERS TO BE REMOVED FROM FILL EXTENSIONS.
6. PROVIDE FOR SURFACE DRAINAGE AWAY FROM THE EDA.

SEPTIC TANK

1. TANK TO BE FITTED WITH RUBBER INLET & OUTLET SEALING BOOTS. USE SCHEDULE 40 PVC PIPE FROM FOUNDATION TO TANK INLET AND FROM TANK OUTLET TO "D" BOX. IN THOSE CASES WHERE THE PROTECTIVE WELL RADIUS OVERLAPS THE TANK INLET PIPE IT SHALL BE HAVE AN SDR OF 26 OR GREATER.
2. PER ENV-WQ 1010.07
INLET & OUTLET BAFFLES SHALL BE SECURED TO THE INLET & OUTLET PIPES USING STAINLESS STEEL SCREWS.
INLET BAFFLES THAT EXTEND ABOVE THE LIQUID LEVEL SHALL NOT BE LESS THAN 1" FROM THE INTERIOR TOP OF THE SEPTIC TANK COVER.
THE BOTTOM OF THE INLET BAFFLE SHALL BE AT LEAST 8" BELOW THE LIQUID LEVEL BUT AT NO TIME GREATER THAN THE DEPTH OF THE OUTLET BAFFLE.

DESIGN NOTES

1. THE ENTIRE SYSTEM MUST BE CONSTRUCTED IN STRICT ACCORDANCE WITH THE APPROVED PLAN. ANY CHANGES MUST BE APPROVED BY THE DESIGNER BEFORE CONSTRUCTION BEGINS.
2. ANY DISCREPANCIES BETWEEN THE APPROVED PLAN AND THE ACTUAL SITE CONDITIONS MUST BE REPORTED TO THE DESIGNER BY THE INSTALLER PRIOR TO CONSTRUCTION.
3. THIS SYSTEM IS NOT DESIGNED FOR USE WITH GARBAGE GRINDER OR WATER CONDITIONER INSTALLATION, NOR IS IT DESIGNED FOR HIGH VOLUME DISCHARGE APPLIANCE USE.
4. DESIGN INTENT: THE BOTTOM OF THE EFFLUENT DISPOSAL AREA (EDA) SHALL BE CONSTRUCTED AT 287.0' ELEVATION; AND THE SYSTEM BOTTOM IS APPROXIMATELY 3.5' BELOW ORIGINAL GROUND ON THE HIGH CONTOUR AT WESTERLY END OF PROPOSED BED = 290.50'.
5. LOT LOADING CALCULATIONS: ENV-WS 1005.04(a)
LOT SIZE = 1200 GPD / 2000GPA X GROUP 1 SOIL FACTOR OF 1.0 = 26,136sf ENV-WS 105.03(3)(b) SITE W/MUNICIPAL WATER SUPPLY REQUIRES 50% OF THE CALCULATED AREA OR 20,000sf MINIMUM LOT SIZE = 26,136/2 = 13,068 PROVIDING 95,832sf
6. VERTICAL DATUM IS NGVD 1934 AS REFERENCED TO BENCHMARK C 75, A U.S.C.&G.S. STANDARD DISK LOCATED 62' NORTH OF U.P. 4/175 1/2 ELEVATION = 291.90'

TEMPORARY BENCHMARKS (TBMS) ESTABLISHED BY TRIGONOMETRIC LEVELING USING AN ELECTRONIC TOTAL STATION SURVEY INSTRUMENT

TBM A – DRILL HOLE W/PK NAIL & ALUMINUM DISC IN STONE WALL
ELEVATION = 291.7'.

TBM B – PK NAIL SET AT SOUTHERLY EDGE OF PAVEMENT
ELEVATION = 291.0'

TBM C – PK NAIL SET AT SOUTHERLY EDGE OF PAVEMENT
ELEVATION = 290.9'

TBM D – BENCH TIE SET ON EASTERLY SIDE OF UTILITY POLE #6S
ELEVATION = 290.7'

TEST PIT 1
9/22/04

ESHWT = N/O TO 85"
FREE WATER = None observed
STONES = N/O
ROOTS = N/O

0" + 0" PACKED GRAVEL
0" – 6" 10YR3/6 Very dark yellowishish brown coarse sandy gravel, Moist, Single grain, Very friable
6" – 14" 10YR3/2 Very dark grayish brown loamy medium sand, Moist, Granular, Very friable
14" – 27" 10YR4/6 Dark yellowish brown coarse sand Moist, Single grain, Loose
27" – 70" 10YR5/6 Yellowish brown coarse sand, Moist, Single grain, Loose
70" – 102" 2.5Y6/4 Light yellowish brown medium sand, Moist, Single grain, Loose
REFUSAL = None observed

PT percolation rate = 2 min/inch @ 24"

SOIL TYPE: WdB WINDSOR LOAMY SAND 3 TO 8 % SLOPES
SOURCE: SOIL SURVEY OF HILLSBOROUGH COUNTY N.H., EASTERN PART, SHEET 3

PERCOLATION TEST DATA:
DATE TEST CONDUCTED: 9/22/04
2 MIN./INCH @ 24"

LEACHING CHAMBERS REQUIRED
DAILY FLOW BASED ON ENV-WS 1008.03 TABLE 1008-1
CHURCH SUPPERS/CATERERS @ 12 GPD/PATRON MAX CAPACITY = 100
TOTAL GPD = 1200

SQUARE FOOTAGE BASED ON COMPUTATION TABLES
ENV-WS 1014.08 AND 1016.03 REQUIRES 46.88 CHAMBERS.
PROVIDE 48 CHAMBERS
IN 6 ROWS OF 8 CHAMBERS
IN AN EDA 26' WIDE BY 67' LONG

TOPO AND SEPTIC SYSTEM: ELECTRONIC TOTAL STATION INSTRUMENT SURVEY BY THIS OFFICE

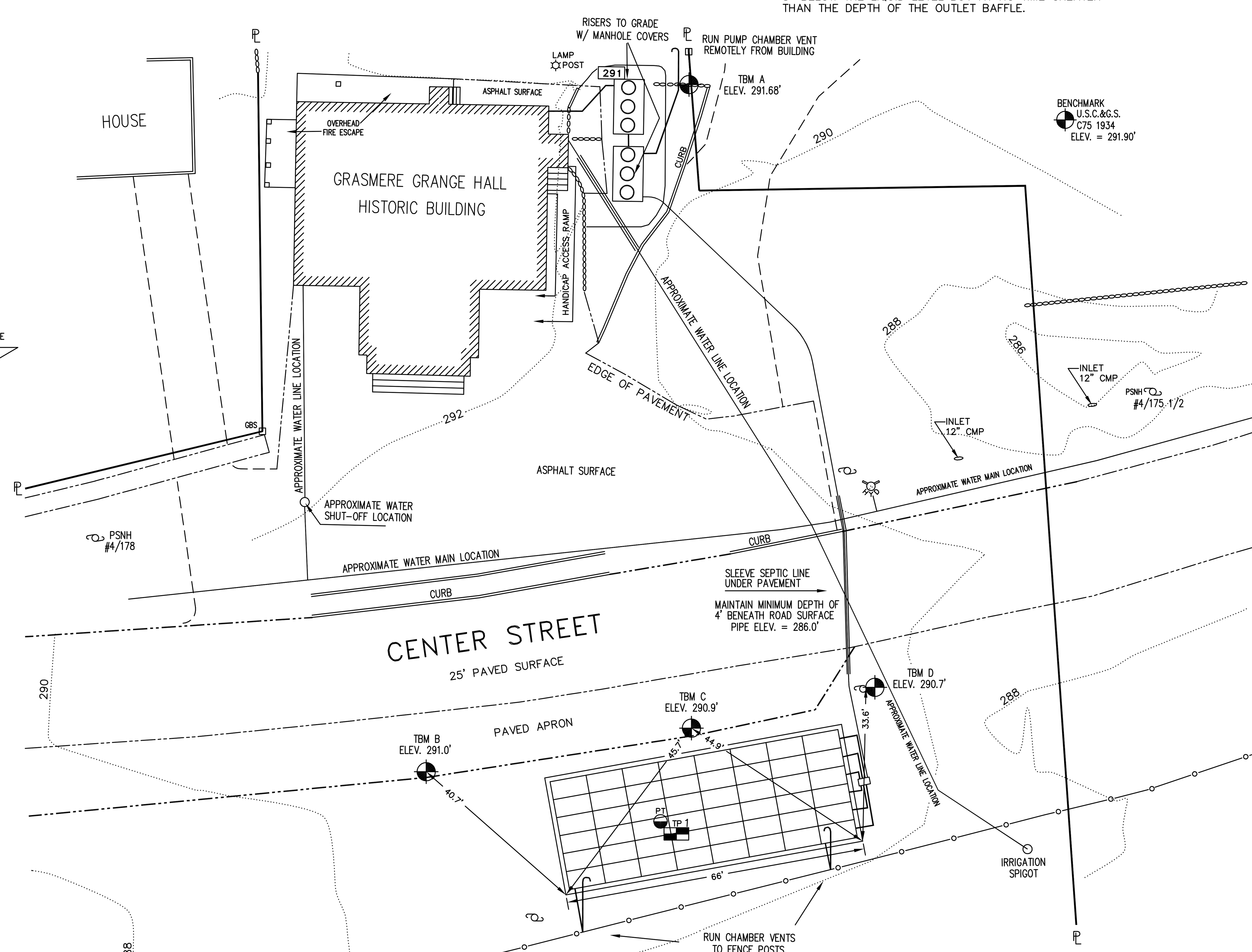

"HILLSIDE CEMETERY"

SCALE 1"=20'

1FT.=0.3048 METERS / 1AC.=0.4047 HECTARES

INCHES TO DECIMALS OF A FOOT

1/16=.0052'	1"=.0833'
3/32=.0078'	2"=.1667'
1/8=.0104'	3"=.2500'
3/16=.0156'	4"=.3333'
1/4=.0208'	5"=.4167'
5/16=.0260'	6"=.5000'
3/8=.0313'	7"=.5833'
1/2=.0417'	8"=.6667'
5/8=.0521'	9"=.7500'
3/4=.0625'	10"=.8333'
7/8=.0729'	11"=.9167'

NO ABUTTING HOUSE, SYSTEM OR WELL WITHIN 100' OF DESIGN EDS

NO POORLY DRAINED SOIL WITHIN 100' OF DESIGN EDS

NO WETLAND OR SURFACE WATER WITHIN 100' OF DESIGN EDS

LOCATION PLAN
SCALE: 1" = 2000'

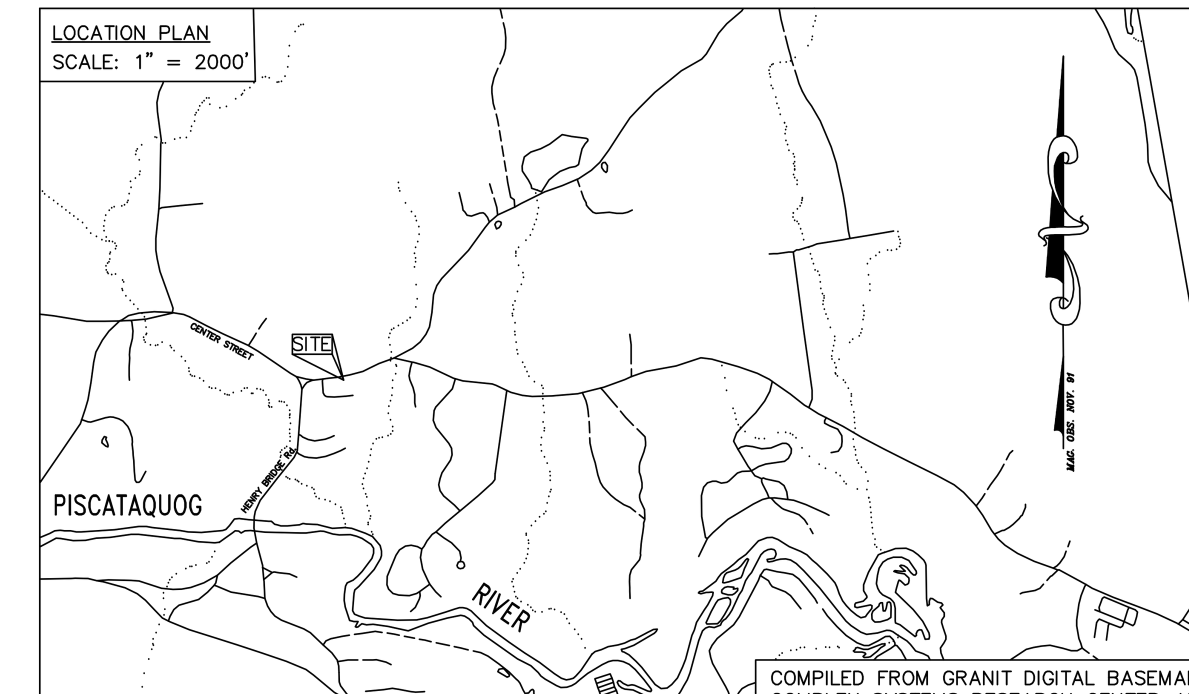

COMPILED FROM GRANIT DIGITAL BASEMAP BY COMPLEX SYSTEMS RESEARCH CENTER, U.N.H.

DIRECTIONS TO SITE: SITE IS LOCATED IN GRASSMERE VILLAGE SECTION OF GOFFSTOWN. PROPOSED SYSTEM IS LOCATED ON THE SOUTHERLY SIDE OF CENTER ROAD ADJACENT THE HILLSIDE CEMETERY ACROSS FROM U.P.4/178

PLAN OF EFFLUENT DISPOSAL SYSTEM

OWNERS: TOWN OF GOFFSTOWN
16 MAIN ST.
GOFFSTOWN, N.H. 03045

TAX MAP 28 LOT 28
GOFFSTOWN, N.H.

DATE: 6/8/16

JOB #: 8745-2016 SHEET 1 OF 1

THIS PLAT MAY NOT BE COPIED, REPRODUCED, DISTRIBUTED OR ALTERED WITHOUT THE WRITTEN PERMISSION OF ROBERT B. TODD, EXCEPT:
1. PUBLIC OFFICIALS MAY MAKE NOTATIONS HEREON AND/OR REPRODUCE OR HAVE REPRODUCED THIS PLAT AS MAY BE NECESSARY TO MEET AND SATISFY SUCH RULES, REGULATIONS AND LAWS AS MAY BE APPLICABLE TO THE PROPERTY AND/OR THE USES TO BE MADE OF THE PROPERTY.
2. THE PERSONS OR FIRM FOR WHOM THE PLAT HAS BEEN PREPARED MAY MAKE OR HAVE MADE ON THEIR BEHALF, SUFFICIENT COPIES TO ACCOMPLISH THE PURPOSES FOR WHICH THE PLAT WAS PREPARED.

NEW HAMPSHIRE Designer of Subsurface Disposal Systems *** Richard J. Kohler No. 1562 Department of Environmental Services

THIS SITE WAS EVALUATED BY THE STANDARDS AS REQUIRED BY THE WATER DIVISION OF THE DEPARTMENT OF ENVIRONMENTAL SERVICES. THE SITE EVALUATION ... ARE BASED UPON TECHNICAL ... TODAY. FURTHERMORE THERE IS NO ... THIS SYSTEM WILL WORK OR WILL CONTINUE ... TO THE BEST ... THIS PLAN ... ORDINANCES ...

REVIEWED AND APPROVED
IN ACCORDANCE WITH THE REQUIREMENTS OF THE NH DEPT OF ENVIRONMENTAL SERVICES WATER DIVISION
Date: 7/7/2016
#eCA2016070741

TODD

LAND USE CONSULTANTS
ROBERT B. TODD
336 Francestown Road New Boston, N.H. 603-487-2996
Professional Services/ Land Surveys · Forestry · Septic Designs
Soil Analyses · Land Use Planning
Trespass Damage Appraisal · Landscape Design